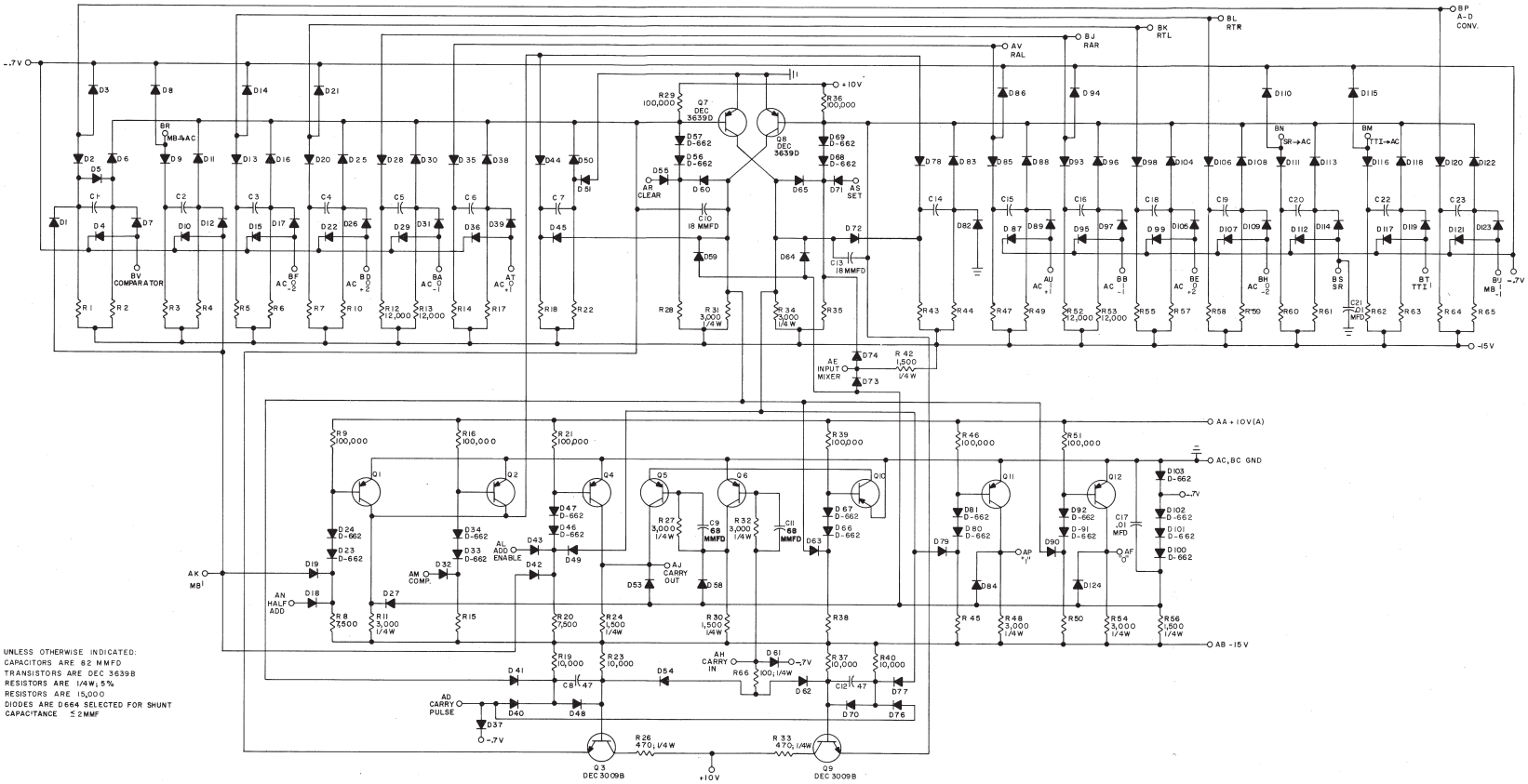

UNLESS OTHERWISE INDICATED:
CAPACITORS ARE 82 MMFD
TRANSISTORS ARE DEC 3639B
RESISTORS ARE 1/4W; 5%
RESISTORS ARE 15,000
DIODES ARE D664 SELECTED FOR SHUNT CAPACITANCE ≤ 2MMF

CS-D-R210-0-1
PDP Accumulator R210 (Rev S)